SKU: F-C10-V2

C10

ALL-IN-ONE TRAINER

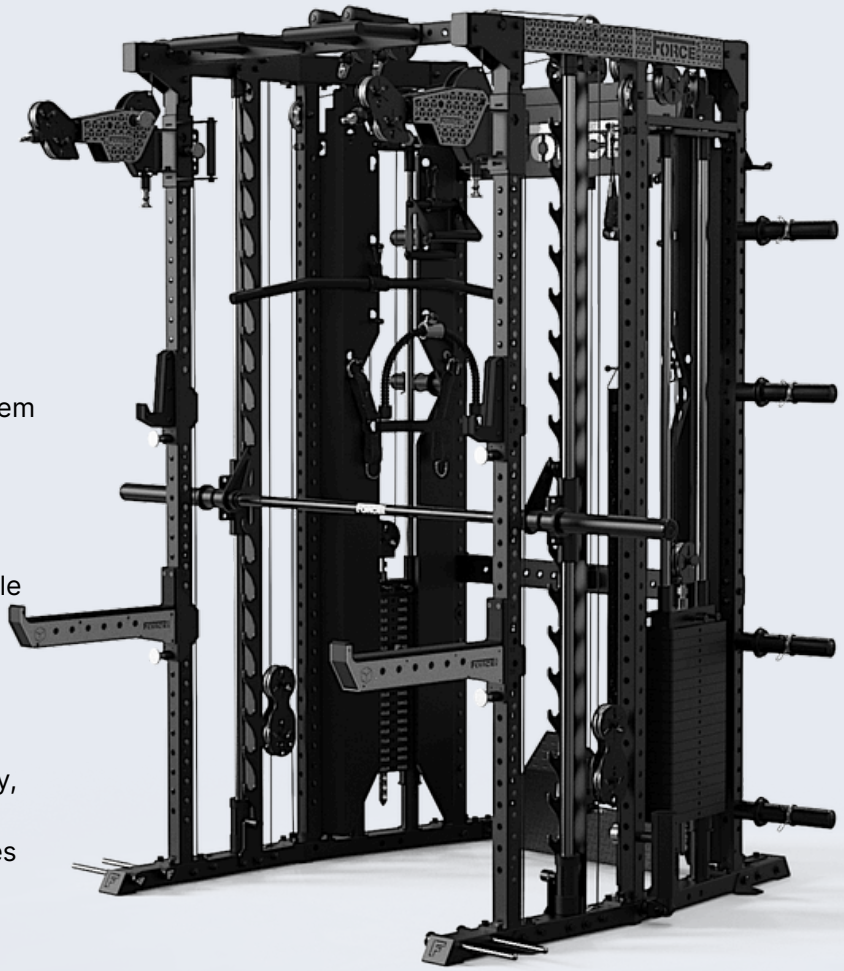

Sleek, Strong Compact Design

11-gauge 2×2 uprights with laser-cut ⅝″ holes and 2″ spacing on every face. 44″ interior working space and a flush, self-leveling base.

Freestyle Articulating Arms

The strongest, most versatile pulley arms on the market. Features a unique Lock & Flow mode system for Traditional Strength training or Dynamic Sport Specific movements.

Six Pulley Connections

Dual Freestyle Arms plus high and low center cable station. Three pulley ratios deliver up to 500 lb of center cable resistance.

Single Track Smith Machine

Single-column architecture delivers superior safety, wrapping the guide rod and linear bearings in 5-gauge steel, paired with a knurled barbell, grip lines and spinning sleeves.

Upgradeable 250 lb Weight Stacks

Dual 200 lb stacks, upgradable to 250 lb per side. Maximum 500 lb resistance when both 250 lb stacks connect through the 1:1 ratio system

*Sliding Bench Compatible

The Most Compact 6- Pulley Station Cornerstone

Most all-in-one trainers cut corners on steel, the C10 doesn't. 11-gauge 2×2 uprights, a single-track Smith and Freestyle Articulating Arms with Lock & Flow modes engineered for both heavy strength work and explosive, functional training.

Plate-free, cable-driven resistance up to 500 lb, upgradeable to 250 lb stacks, an integrated storage system and 20+ pro-grade attachments included. The standard for what an all-in-one trainer should be.

© 2025 Force USA. All rights reserved.

INCLUDED ATTACHMENTS

- Adjustable Pull Up Handle (pair)
- Mag Pin (4)
- Weight Plate Storage (8)
- Spring Collar (8)
- Landmine Magnet
- Magnetic Landmine
- Low Row Footplate
- Spotter Arm (pair)
- J-Hook (pair)
- Close Grip /Landmine Handle
- Barbell Hanger
- Bodyweight Assisted Strap
- Knurled D-Handle (pair)
- Tricep Rope
- Extension Chain (4)
- Ankle Cuff
- Revolving Lat Pull Down Bar
- Pegs (12)
- Dual Cable Connector
- Magnetic Olympic Lock Collar (pair)
- L-Shape Floor Bracket (4)

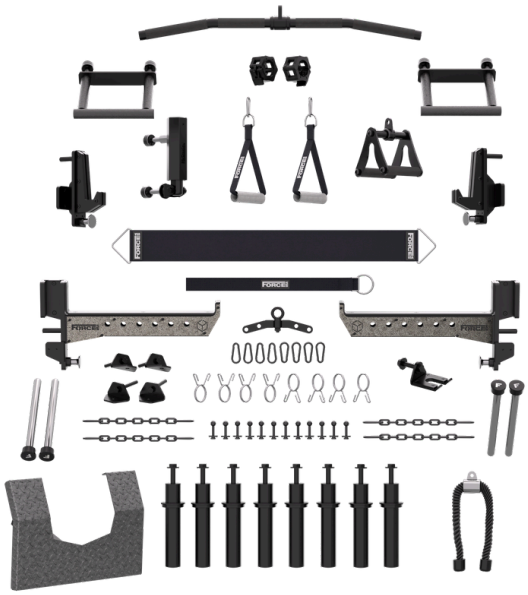

SHIPPING SPECIFICATIONS

		W	L	H	Weight
BOX 1	cm	98	230	40	290 kg
	in	39	29	16	640 lb

		W	L	H	Weight
BOX 2	cm	59	70	20.5	215 kg
	in	24	28	9	474 lb

FRAME & DIMENSIONS

Exterior	48″ W (77″ w/ Smith) × 56″ D × 87.5″ H
Interior	44 W × 48″ D × 83″ H
Uprights	2×2″ 11-gauge steel, ⅝″ hole pattern
Smith Bar Weight	35 lb / 16 kg integrated

WEIGHT RATINGS

Cables	907 kg	2000 lb

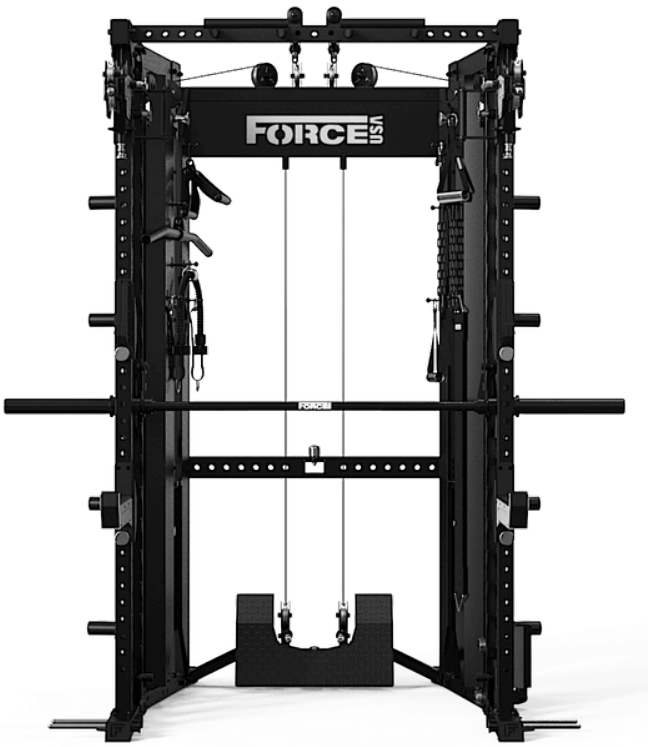

*Sliding Bench Compatible

© 2025 Force USA. All rights reserved.